POWER SUPPLY

Ultra-Quiet 300-Watt ATX
12V Power Supply

ATXPOW300SL

Instruction Guide

*Product may vary slightly from photo

StarTech.com

The Professionals' Source For Hard-to-Find Computer Parts

Revised: February 17, 2003

Technical Support

The following technical resources are available for this StarTech.com product:

On-line help:

We are constantly adding new information to the *Tech Support* section of our web site. To access this page, click the *Tech support* link on our homepage, **www.startech.com**. In the tech support section there are a number of options that can provide assistance with this card.

Knowledge Base - This tool allows you to search for answers to common issues using key words that describe the product and your issue.

FAQ - This tool provides quick answers to the top questions asked by our customers.

Downloads - This selection takes you to our driver download page where you can find the latest drivers for this product.

Call StarTech.com tech support for help: **1-519-455-4931**
Support hours: Monday to Friday 9:00AM to 5:00PM EST (except holidays)

Warranty Information

This product is backed by a three-year warranty. In addition StarTech.com warrants its products against defects in materials and workmanship for the periods noted below, following the initial date of purchase. During this period, the products may be returned for repair, or replacement with equivalent products at our discretion. The warranty covers parts and labor costs only. StarTech.com does not warrant its products from defects or damages arising from misuse, abuse, alteration, or normal wear and tear.

Limitation of Liability

In no event shall the liability to StarTech.com Ltd. (or its officers, directors, employees or agents) for any damages (whether direct or indirect, special, punitive incidental, consequential, or otherwise), loss of profits, loss of business, or any pecuniary loss, arising out of related to the use of the product exceed the actual price paid for the product.

Some states do not allow the exclusion or limitation of incidental or consequential damages. If such laws apply, the limitations or exclusions contained in this statement may not apply to you.

Product Specifications

Dimensions	5.9 x 3.4 x 5.5 inches (150 x 86 x 140mm)
Weight	3.2 lbs (1.45 kg)
Input Voltage	115V/230V
Output Power	300W
Connectors	6 x 4-pin-LP4-female 2 x small-internal-power 1 x 20-pin-ATX-motherboard-adapter 1 x 4-pin extended ATX power 12V plug 1 x 6-pin aux plug
MTBF	100,000 Hours (at 77ºF/25ºC)
Safety Approvals	TUV, UL, CE, FCC, CSA, CB ß
AC INPUT	Voltage 115V~ Current 8A Voltage 230V~ Current 4A Frequency 50~60Hz
DC OUTPUT	+3.3V (28A) +5V (30A) +12V (15A) -5V (0.5A) -12V (0.8A) +5VSB (2A)

Table of Contents

Introduction 2

Installation 3

Product Specifications 4

Technical Support 5

Warranty Information 5

Introduction

Thank you for buying a StarTech.com 300-Watt ultra-quiet ATX 12V power supply. With virtually silent operation, the ATXPOW300SL quietly provides a stable power supply to your system components. The quiet ball-bearing fan maintains an optimum operating environment for heat-sensitive components, providing you with a smart and silent reliable power supply.

Features

- Virtually silent operation (normal operation noise level of approximately 25 dBA)
- Ideal for Pentium II, Pentium III, Pentium 4, and AMD Athlon XP processors
- Constructed from the highest quality components to assure a long life
- Automatically detects temperature and adjusts fan speed to maintain optimal performance
- Uses superior EMI/RFI power filtration system ensure system components receive clean, stable power
- Backed by StarTech.com's three-year warranty

WARNING! Computer parts can be severely damaged by static electricity. Be sure that you are properly grounded before opening your computer case. StarTech.com recommends that you wear an anti-static strap when installing any computer component. If an anti-static strap is unavailable, discharge yourself of any static electricity build-up by touching a large grounded metal surface (such as the computer case) for several seconds. Also make sure that your computer is turned off and unplugged before attempting to open your computer case.

Contents

This package should contain:

- 1 x ATXPOW300SL power supply

  1 x power cord

Installation

NOTE: Check the power supply voltage before installation. It should be the same as your local power voltage (115V for North America and 230V for most of the European countries). Change the voltage setting if necessary.

1. Make sure that your system is turned off and unplugged. Disconnect the power cord from your old power supply.
2. Open the case (consult your computer's user guide for details, if necessary).

NOTE: Before completing the next step, you may want to take note of what devices are attached to your current power supply so you know which devices need to be connected to the new power supply and where their connectors are located.

3. Disconnect all power connectors from the mother board and the peripheral devices such as hard drives, floppy disks, etc. Make sure that there are no devices connected to your existing power supply.
4. Remove the existing power supply from your computer case and replace it with the new StarTech.com power supply.
5. Connect the power connectors to your motherboard and peripheral devices.
6. Close your computer case.
7. Connect the power cord to the StarTech.com power supply.
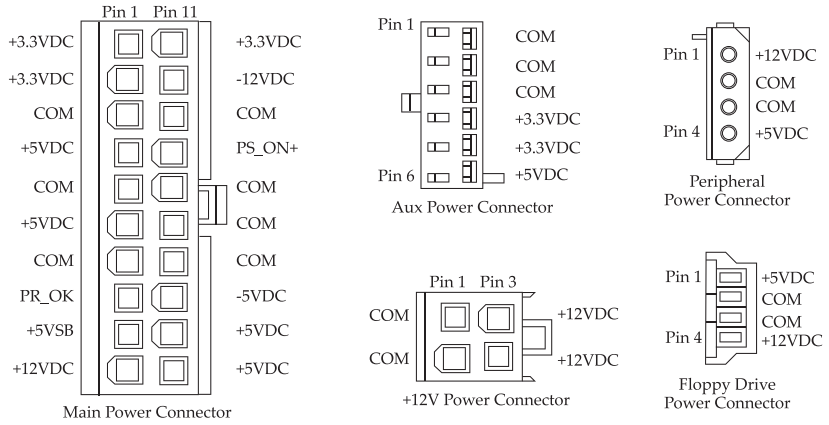
ATXPOW300SL Connectors